CareFlex

EasiTilt User Instructions

UI



These are the user instructions for the CareFlex EasiTilt chair. Please read them carefully before using the chair, and keep them in a safe place for future reference. These instructions include details of the performance of the chair. If the chair starts operating outside its intended performance, shows signs of damage or excessive wear, or otherwise feels unsuitable, please take it out of service and contact CareFlex or your CareFlex distributor immediately.

TESTED TO fireinternational BS EN 16139:2013 Test Level 2

CE UK CA Class I Medical Device

WARNING

A level of supervision appropriate to the user's abilities must be applied at all times.

The EasiTilt Chair

The EasiTilt is an adaptable chair designed for individuals who require a combination of comfort, function, postural support and pressure care. This chair can be used in multi-user environments or for individual users due to its adjustability and range of accessories.

The EasiTilt is a seating solution for young adults and older people with the following conditions and postural challenges:

- Neurological and neuromuscular conditions
- Cardiovascular conditions
- Orthopaedic conditions
- Frail and elderly
- Semi-ambulant or non-ambulant individuals

It is also suitable for the following environments:

- Nursing and residential homes
- Hospital wards
- Rehabilitation settings
- Domestic and home care environments

Set-up and Adjustment

Most adjustments on the EasiTilt can be made quickly and easily using no tools. When set up correctly, the EasiTilt should:

- Support the user in an appropriate seated position.
- Promote the user's functional ability.
- Provide appropriate postural stability and pressure management.
- Enable smooth and precise operation of the Tilt-in-Space and leg rest elevation features.

For the EasiTilt to perform effectively it is essential that an assessment has taken place and that the chair has been set up for the user based on the outcomes of the assessment.

Regularly check the EasiTilt set-up to ensure that it is supporting the user's posture as intended and that the user is benefiting from the integrated pressure management.

If you are in any doubt about the safe operation of the EasiTilt, contact the CareFlex Customer Support team or your local CareFlex distributor for clarification and further training.

Technical Drawings

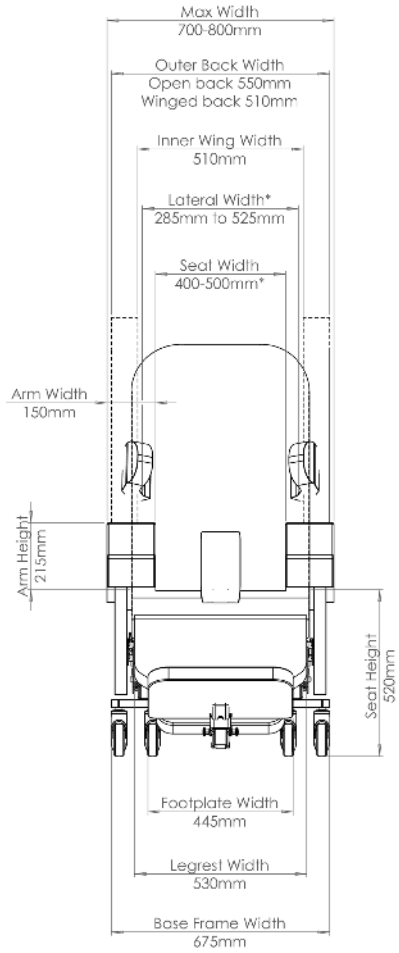

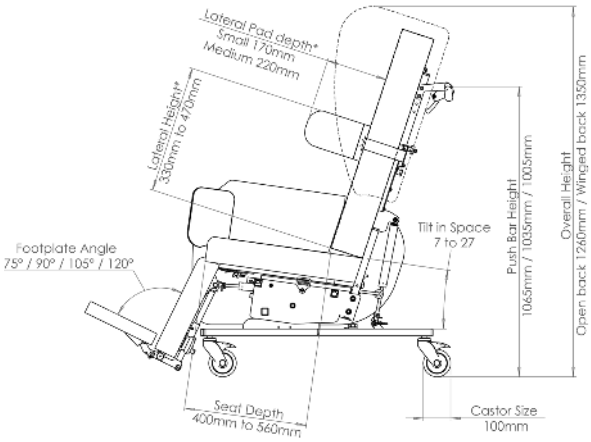

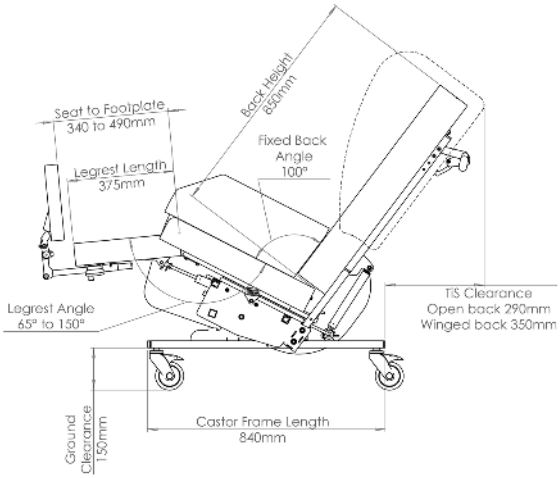

* Laterals are not available on the Winged Back version

Standard unboxed product weight, no accessories:
Open back: 53 kg
Winged back: 56 kg
Motorised: add 5 kg to the above
Maximum user weight: 160 kg

1. Brakes & Castors

- To locate the brakes, push the chair forward so that the rear and front castors swing around and the brakes can easily be accessed.
- Use your foot to press down on the end of the blue brake lever to lock the castors.
- Gently lift the top of the blue brake lever upwards to unlock the castors.
- As standard, the EasiTilt has two rear brakes and two front brakes.



There is an option to upgrade to one directional lock castor or four 125 mm castors, if required.

Always brake the castors before transferring the user onto or off the chair, or before performing adjustments.

2. Tilt-in-Space

The EasiTilt chair has a Tilt-in-Space function that allows the user to be tilted without adjusting the critical angles for sitting at the hips and knees. This helps the user to maintain a stable sitting posture while redistributing their weight over a large surface area.

Manual Operation:
Tilt-in-Space is controlled with the lever on the right-hand side of the push handle at the back of the chair:

- To adjust the angle of tilt, ensure both hands are placed on the push handle and you are in a comfortable, stable position.
- Squeeze the lever and tilt the chair to the desired angle. Release the lever to lock the chair at the desired angle.

Do not attempt to raise the user to a standing position when the chair is tilted backwards.

Motorised Operation:
On motorised chairs, the second row of buttons on the handset controls the Tilt-in-Space angle adjustment.



3. Seat Depth

Appropriate seat depth is critical to the performance of the chair and the user's postural stability. When set correctly, the user's pelvis should be positioned at the back of the chair with a gap of approximately two finger-widths between the back of the knee and the front of the seat cushion. To adjust seat depth:

- Locate the lever at the back and left-hand side under the chair.
- Twist the lever down and pull or push the handle on the right-hand side until the seat depth is in the desired position.
- Release the lever and pull the handle until the seat "clicks" positively into position.



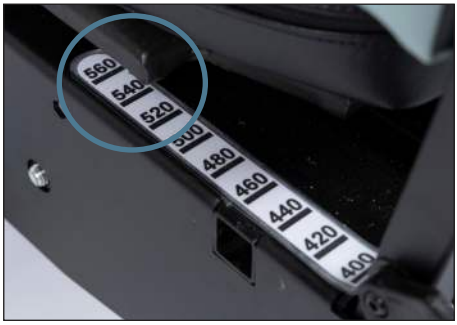

Note the seat depth indicator sticker located on the left side of the seat base. The corner of the seat board (circled) will line up with the desired seat depth.

Never adjust the seat depth when the user is in the chair, or the chair is tilted. Take note of potential hand and finger traps with the sliding parts.

4. Seat Width

Correct seat width is important for the user's lateral stability. To adjust seat width, each armrest can be adjusted. You can adjust the seat width by moving the arms in or out. A sticker on the arm brackets indicates the range between 400 mm and 500 mm.

- Ensure the brakes are on.
- Locate the two handwheels securing each arm, one is located at the front of the seat base, and one is located at the rear.
- Turn clockwise to loosen.
- To reduce seat width, move the armrests inwards to the centre of the chair by pushing the arms to the desired position.
- To increase seat width, move the armrests outwards by pulling the arms outwards with both hands to the desired position.
- Once the desired seat width is achieved, turn the four hand wheels anti-clockwise to lock the armrests in position.

Arm Removal:
The armrests can be removed to aid user transfers, positioning, cleaning and servicing.

This may cause some superficial damage to the seat width stickers if undertaken without care.



5. Leg Rest Elevation

The leg rest can be elevated to promote comfort during periods of rest, or to achieve a change of position:



Manual Operation:
Locate the lever at the right-hand side of the leg rest (circled).

Squeeze the lever and, using both hands to control the leg rest, lift or lower it to the desired angle.

Release the lever to lock the position.



Motorised Operation:
On motorised chairs, the top row of buttons on the handset controls the leg rest elevation.

Never leave the user unsupervised in the chair with the leg rest elevated.

Leg rest elevation should only be used within the ranges tolerated by the user based on their knee range of movement and should not affect pelvic stability.

6. Back Options

The EasiTilt is available with a range of different back options to suit the requirements of the user.



Open Back:
The Open Back is supplied with a Flat Back cushion featuring gentle contouring to support comfort and positioning.
Constructed from pressure-redistributing Reflexion® foam, the cushion helps provide a stable seating surface while supporting pressure management needs.
The open design enables the fitting of optional curved lateral supports and kidney pads, making it suitable for users who may benefit from additional postural support and adjustment.

6. Back Options

Winged Back:
The Winged back option provides mild postural support via the wings, and is better suited to active users who can support their own posture. The Winged back is available with the following back options:

- **Flat Back:** The Reflexion® foam back can support pressure redistribution by reducing interface pressures over critical parts of the body subjected to compression. Reflexion® foam reacts to body heat and moulds around the contours of the user so that body weight is distributed more evenly across the whole surface area to promote comfort and stability.
- **Contoured Back:** This option is available, providing lateral support to assist with leaning postures and give additional control during upper trunk movement. The contoured back consists of a medium density Reflexion® foam profile with sculpted sides to support the trunk.
- **Waterfall Back:** This provides additional cushioning and pressure redistribution. The back cushion elements have removable Dacron filling that can be adjusted where needed to increase or reduce filling in certain areas. This can be achieved by unzipping each element to access the pillows. Each pillow has pockets that allow access to the Dacron filling.
- **Cocoon Back:** This provides wraparound support by integrating softly contoured lateral wings into a unified back cushion design, creating a more enveloping seating experience. The cocoon structure promotes even pressure distribution while offering gentle, consistent trunk support, with a series of adjustable, refillable cushion sections, allowing clinicians to tailor firmness and support across key areas such as the lumbar, thoracic, and lateral zones.

Adjustments should only be made following guidance from a health and social care professional.



Flat Back



Contoured Back



Waterfall Back



Cocoon Back

7. Back Replacement

Replacing the backs is relatively straightforward, and an open back can be replaced with a winged back, and vice versa with basic tools.

Back Removal – For both open and winged backs it is possible to remove the whole back by undoing the six button-head screws using a 5 mm hex key as detailed (you do not need to fully remove the screws). Lift the whole back out of the slots. To refit either a new back or the same back, repeat this in reverse.



Winged back options can be switched between flat, waterfall and contoured by using the double Velcro security strips on the top and bottom of the backboard.



8. Headrests (Optional)

The headrests should always support as much of the user's head as possible. They can be adjusted up and down via the strap which loops around the push handle and is held in place with Velcro.



9. Footplate

Footplates are important for the user's comfort, postural stability and pressure distribution. The footplate is fixed into a bracket on the back of the leg rest. To insert and adjust the footplate height:

- Pull out the locating pin on the bracket and insert the footplate.
- Slide the footplate up or down to adjust to the desired height.
- Release the locking pin; the pin should 'click' into position when the footplate is properly located.
- Note that the footplate stem has a ratchet and wheel safety feature. This ensures that, should the footplate come into contact with the floor, it will rise up out of the way, maintaining chair stability. The wheel offers some protection to the flooring.



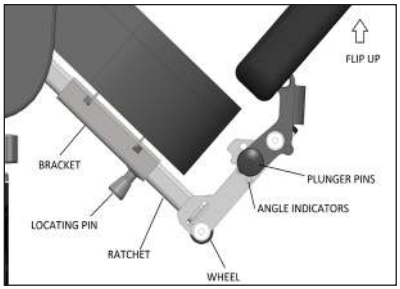

The ratchet feature is predominantly for safety. We advise that the footplate height is reduced by hand every time the leg rest is lowered.

The EasiTilt footplate angle can be adjusted to support a neutral foot position or accommodate fixed ankle postures. To adjust the footplate angle:

- Ensure this operation is carried out by a competent person, and that no weight is being applied to the footplate.
- The position is set by the plunger pins as shown; each indicator offers one of four different positions and 0° is achieved when vertical. Pull out one of the plungers and twist so that it is locked off (see image).
- With one hand safely on the footplate, pull out the second plunger pin so that the footplate can angle to the desired setting.
- When this is achieved, lock both plunger pins into position, fully engaging with the corresponding holes on each side.
- The footplate will 'flip up' to vertical 0° from any position and return to its original setting.

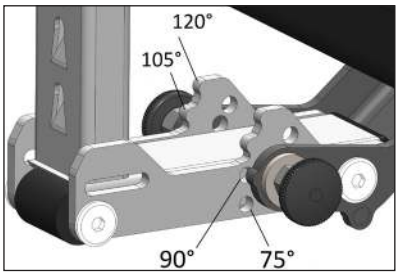



Keep fingers away from the mechanism when performing this task to avoid any potential finger traps.

The footplate can be adjusted and set to a choice of four positions: 75°, 90°, 105° and 120°. This equates to a 45° range of adjustment. In all angled positions the footplate can be easily lifted up to 0° vertical to move it out of the way.

10. Pelvic Belt* (Optional)

Pelvic belt length is adjusted by the two-part buckle and a 'tri-glide' adjuster:

- To fasten the buckle, click the two halves together.
- To release the buckle, press the tabs on the sides of the buckle and pull the two halves apart.



All belts and harnesses (positioning aids and flexible postural supports) must be prescribed, implemented and monitored responsibly following a comprehensive risk assessment. Please see the Disclaimer for further information.

11. Groin Harness* (Optional)

The groin harness is a positioning aid that can provide maximum pelvic control to help stabilise the position of the pelvis and prevent the user from sliding forward in the chair.

- The harness consists of a padded cross shape and webbing straps. Two points of the padded cross shape are attached at the two slots behind the seat cushion.
- When seated in the chair, the two loose ends of the harness should be pulled up over the user's thighs and attached to the straps at the rear of the chair.
- The harness can be adjusted through the webbing straps.



12. Dynamic Chest Harness* (Optional)

A dynamic chest harness can provide anterior support and comfort while not restricting active positioning or function.

- The dynamic chest harness is held in position with a strap from each corner. Two straps attach at the user's waist and two over their shoulders.
- These straps are attached to the harness with side-lock buckles. The length of the straps can be adjusted through the buckles.

Always ensure the harness is positioned correctly and comfortably, not over-tightened, and that it does not interfere with in situ medical devices.



13. Tray (Optional)

The EasiTilt can be fitted with a tray, which can be used to assist in the user's upper limb positioning and engagement in activities; it should never be used as a restraint.

- Once the user is seated in the chair, rest the tray across the armrests so that the tray fits snugly against the user but does not press into their abdomen.
- The buckles on the tray straps connect to the buckles on the inside of the chair sides. Clip the two halves of the buckles together on all four straps.
- Adjust the tension in the tray straps to secure the position of the tray. The tension can then be adjusted to change the front-to-back position of the tray.



Always ensure that the tray does not interfere with any stoma devices, feeding tubes or similar devices fitted into the user's abdomen.

13a. Retrofitting Tray Straps

If a chair is ordered with a tray, both armrests will come fitted with the appropriate tray attachment straps. Attachment straps will need to be fitted to both armrests of the chair when a tray is ordered retrospectively.
To attach the straps to each armrest, please follow the instructions below:



- Remove each armrest from the chair and lay it down with the inside facing up.
- The tray strap holes have been pre-cut and covered with two screws. Remove and discard these screws to reveal the correct fixing points.
- At the end of each strap is a black plastic bracket; using a 4 mm hex key, secure each one with an M6 screw and washer into each fixing hole in the armrest.
- With the straps hanging downwards, refit both armrests to the chair.
- The tray straps can now be clipped into the tray attachment straps on the armrests.

14. Fixed Pommel (Optional)

A pommel can be used to aid thigh positioning, usually by abducting the thighs, which means moving them apart, to promote postural alignment and pressure care. The pommel is designed to separate and support the whole inside of the knee joint; for this reason, the pommel is not depth adjustable and is positioned out in front of the seat edge.



Fitting and use:

- Fit the pommel with the leg rest angled down as this will give the best access to the bracket.
- Locate the cut-out in the bottom front edge of the seat cushion; the opening for the pommel bracket is located in this cut-out.
- Fit the metal stem of the pommel into the bracket and push the pommel until it clicks into position.
- To remove the pommel, hold it at the bottom edge of the metal stem and pull directly outwards.

A pommel must never be used as a restraint and the user must not be allowed to slide into sacral sitting and come to rest against the pommel.

Swivel-head functionality:
The pommel head can be rotated 360° if required, to help the user achieve a comfortable position. To rotate the head without tools, follow the instructions on the next page.

15. Flip-Down Pommel (Optional)

The flip-down pommel is easily released downwards by pulling the quick-release plunger underneath the pommel head, promoting independence and independent transfers. Once flipped down, the pommel is easy to click back into position by pushing it back into place.





Fitting & use:

- If a flip-down pommel was ordered with a chair, it will be delivered already assembled from the factory. As the flip-down feature aids access to and from the chair, the brackets are fixed in place.
- Pull the plunger pin on the right-hand side of the pommel head, while supporting the pommel in place.
- The pommel will release downwards, allowing the user to enter and exit the chair.
- Push the pommel back into position until it clicks into place.

When pushing back into position, keep hands away from the mechanism.

15. Flip-Down Pommel (Optional)

Swivel-head functionality:
Both pommel heads can be rotated 360° if required, to help the user achieve a comfortable position. To rotate the head without tools:



- Undo the Velcro or zip on the underside of the pommel cover.
- Turn the hand wheel anti-clockwise until the head rotates freely.
- When the desired angle is set, tighten the thumb screw by twisting clockwise.
- Refasten the Velcro or re-zip and refit the pommel into the receiver.
- Check that the user is comfortable and adjust if required.

16. Laterals (Optional)

Lateral supports are available as an optional accessory. Lateral supports are usually adjusted so that they are supporting the user's upper trunk; however, this depends on where support is required based on assessment outcomes.





- Lateral supports should be positioned to support the user in an upright position and limit leaning at the trunk. For comfort, leave a three-finger gap between the top of the lateral and the user's armpit.
- To adjust lateral height, pull out the lower plunger (circled) on the adjustment block fitted to the back of the chair. This plunger controls the indexing pin which locks into the holes in the height adjuster. Raise or lower the lateral pad to the desired height and release the plunger. Push the lateral down until the indexing pin locks in place.
- Width is controlled by the clamp plate on the adjustment block. Turn the hand wheel on the adjustment block until the lateral is free to slide sideways. Once in the desired position, tighten the hand wheel to lock the pad in place.

16. Laterals (Optional)

Retrofitting Laterals
If an EasiTilt was originally ordered with laterals, the chair comes fitted with the rear lateral brackets. If laterals are ordered retrospectively, lateral runners will need to be fitted. Please follow these steps to fit the lateral runners to the rear of the chair:

- Each EasiTilt will be fitted with 16 plastic caps on the back of the chair. Remove each of these to expose the retained nuts.
- Using the fixings provided, fit the brackets to the chair with a 5 mm hex key.

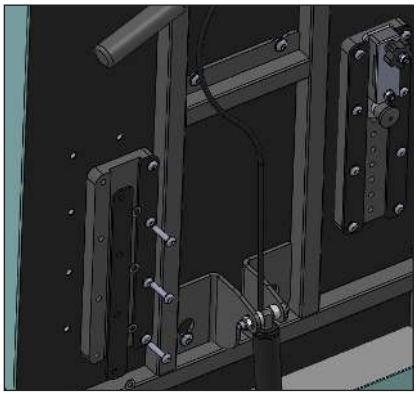

17. Push Bar Height

By default, the push bar is set at 1065 mm. However, if required the push bar can be lowered by either 30 mm or 60 mm, using the extra holes shown below. A 5 mm hex key and 10 mm ring spanner are required to loosen and refit the fixings.

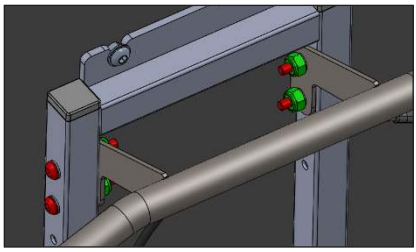



18. Motorised

The motorised EasiTilt uses actuators to adjust the Tilt-in-Space and leg rest elevation. Both systems utilise a 24 V DC rechargeable battery system which needs to be charged regularly to maintain battery performance.



Battery charging

When a motorised chair is first delivered and before it is used, charge the batteries for at least 24 hours to ensure they are at full power. Similarly, if the motors have not been used for a prolonged period, charge the batteries for 24 hours to bring them up to full power. Establish a regular battery-charging routine. Charging the chair regularly overnight is recommended. The battery unit will sound a warning signal when the battery is nearing its minimum recommended charge level. Charge as soon as is practicable once this signal is heard.

Only chargers supplied by CareFlex should be used to charge CareFlex chairs. Do not use a CareFlex charger to charge other products.

- Fit the jack plug connected to the charger into the socket on the handset of the chair.
- Plug the charger into a 240 V AC mains electrical supply and switch on the power to the charger.
- See the notes above for charge times.
- At the end of the charging cycle, switch off the charger and disconnect all leads and plugs.

DO NOT:

- **Leave the charger connected to the chair with the mains power switched off.**
- **Move the chair when it is connected to the mains.**
- **Charge the batteries when there is a user in the chair.**

If, after charging, the motors do not work, take the chair out of service immediately and contact CareFlex or your local distributor.

Care & Maintenance

- When the chair is delivered and every time it is used, check the chair over for signs of damage or excessive wear.
- If the chair shows signs of excessive wear, damage or incorrect performance, please take it out of service immediately and contact CareFlex or the local CareFlex distributor.
- If the user is experiencing severe discomfort, do not use the chair. Take it out of service immediately and contact CareFlex or the local CareFlex distributor.
- The EasiTilt is upholstered in high quality material which is waterproof and fire-retardant. However, do not store or use the chair in damp or wet areas.
- Do not attempt to carry out any structural maintenance or adjustment of the EasiTilt or its accessories without consulting CareFlex or the local CareFlex distributor.

Details of care and maintenance for cover materials can be found in the Fabric Guide. This is available in hard copy on request from CareFlex, or can be downloaded free of charge at www.careflex.co.uk.
With appropriate care and maintenance, the EasiTilt is designed to provide years of service.

Important Safety Information

- Anyone using, providing, setting up or adjusting the EasiTilt chair should take the time to familiarise themselves with all aspects of the chair, including its functions and accessories, before using the chair.
- Do not 'ride' on the push handles or subject them to excessive loads.
- Do not sit on the leg rest or subject it to excessive loads.
- Do not attempt to stand on the footplate.
- Do not tip the chair backwards to ascend steps or overcome thresholds, especially if a user is seated in the chair.
- When moving the chair, always ensure that the user's feet do not drag on the ground. Elevate the leg rest or use the footplate to keep their feet clear of the floor.
- Always ensure that there are no obstructions under the chair and that there is plenty of space around the chair before using the Tilt-in-Space facility.
- Always apply at least two brakes when the user is transferred to or from the chair.
- Always try to avoid storing or using the chair in areas where it may obstruct exits or passageways.
- The EasiTilt must never be used in motor vehicles for user transportation.

***Disclaimers**
Tilt-in-Space and leg rest elevation should always be prescribed responsibly, ensuring that they are safe and appropriate for the user following a comprehensive assessment of posture and risk, with advice sought from the multidisciplinary team where indicated. In some cases, these functions may be contraindicated, and they could also increase shear and friction forces.
All belts and harnesses (positioning aids) must be prescribed, implemented and monitored responsibly following a comprehensive risk assessment. Please see the following for further information:

- Medicines and Healthcare Regulatory Agency (MHRA) (2015) MDA/2015/018 All posture or safety belts fitted to supportive seating, wheelchairs, hoists and bathroom equipment London: MHRA.
- British Standard (BS) (2019) 8625:2019 Selection, placement and fixation of flexible postural support devices in seating London: BSI.
- International Organization for Standardization (ISO) (2024) ISO/TS 16840-15:2024 Wheelchair seating Part 15: Selection, placement and fixation of flexible postural support devices in seating [Online] https://www.iso.org/standard/80064.html

Recycling Policy

CareFlex is committed to supporting responsible environmental practices and operating in a sustainable way.

We continually look for opportunities to reduce our environmental impact and improve performance as part of our overall business approach.

Where possible, our chairs are designed and manufactured using materials that can be recycled. Please refer to the guidance below when your product reaches the end of its usable life.

- Some CareFlex chairs may include batteries. These must not be disposed of with general household waste.
- Batteries should never be exposed to fire, as this presents a risk of explosion.
- Certain materials and components within the chair may be harmful to the environment if not handled correctly.
- Electrical elements must be disposed of through an authorised recycling facility.
- Many components used in CareFlex seating can be recovered and recycled appropriately, such as steel, plastic and timber.
- We encourage all users to act responsibly and make suitable arrangements for recycling once the chair is no longer in safe working condition.
- For specific guidance and legal requirements, please consult your local authority or relevant regulatory body.

The WEEE Directive

The WEEE Directive, 2012/19/EC, urges producers of Electrical and Electronic Equipment (EEE) to provide information on how these products can be treated, reused or recycled. To comply with this directive in the European Union, CareFlex electrical components are marked with a crossed-out wheeled bin symbol. This indicates that the electrical components should be treated in accordance with the WEEE regulations after their useful life.

Identification

Each EasiTilt chair has a unique chair number which must be quoted in any correspondence with CareFlex or the local CareFlex distributor. This is shown on a white label on the back of the chair.



Notes

Write the CareFlex chair number here:



Visit the EasiTilt web page
to view the resources
available.

CareFlex Ltd, Templer House, King Charles Business Park,
Old Newton Road, Heathfield, Devon, TQ12 6UT.
Tel: 0800 018 6440 | www.careflex.co.uk | info@careflex.co.uk