

EasiTilt®

A Supportive Chair When Sitting Becomes More Difficult

Product Guide

CareFlex

The EasiTilt®

The CareFlex EasiTilt is a supportive care chair designed for individuals who are beginning to experience difficulty maintaining a stable sitting posture. Many individuals reach a stage where a standard armchair or rise and recline chair no longer provides adequate support. This may present as forward sliding, lateral leaning, reduced sitting tolerance, or an increased need for repositioning assistance from a caregiver.

The EasiTilt provides a supportive seating solution designed to help individuals maintain a more stable sitting posture while remaining engaged with their surrounding environment.

Unlike traditional recliners, the EasiTilt incorporates Tilt-in-Space functionality and adaptable postural support, allowing the whole chair to tilt while maintaining body alignment and pelvic stability.

Designed for Home, Health and Care Environments

The EasiTilt is designed for use across domestic, residential care, and clinical environments, providing supportive seating that combines clinical function with a comfortable, familiar appearance.

It is particularly suitable for individuals who:

- Spend extended periods sitting during the day
- Require assistance with positioning or repositioning
- Benefit from pressure redistribution
- Need a supportive alternative to a standard recliner chair
- Live at home with family or formal care support
- Reside in residential or nursing care settings

Standard Features at a Glance

FEATURES

- Tilt-in-Space
- Adjustable seat width and seat depth
- Fixed back angle for stability
- Five different back options
- Elevating and negative angle leg rest
- Angle adjustable flip-up footplate
- Removable Transfer-Assist arms
- Pressure redistributing Reflexion® foam
- Comfort push handle with adjustable height settings
- Manual or motorised options
- Four fully braked castors
- Transfer aid compatible

ENVIRONMENTS

- Hospital wards and clinical environments
- Rehabilitation settings
- Nursing and residential homes
- Domestic and home care environments

SUITABLE FOR

- Neurological and neuromuscular conditions
- Cardiovascular conditions
- Orthopaedic conditions
- Frailty associated with ageing
- Reduced mobility



Take a Closer Look



Removable Transfer-Assist Arms

Transfer-assist arms are included as standard. Arms can also be fully removed to assist with:

- side transfers
- sling application
- cleaning and maintenance



Adjustable Seat Width and Seat Depth

Seat width and seat depth adjustments allow the chair to be configured for the individual user, with set-up indicators included. Correct seat dimensions are essential for pelvic stability, postural support and pressure distribution.

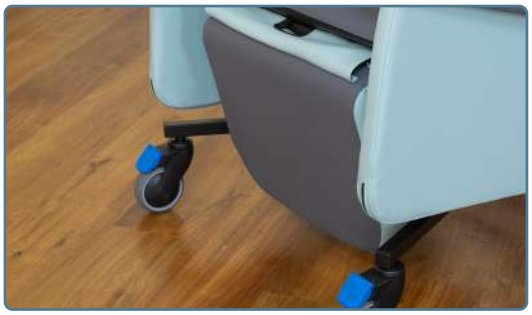

Elevating and Negative Angle Leg Rest

The leg rest supports lower limb positioning and comfort.
Benefits may include:

- support for lower-limb positioning
- accommodation of limited knee range



Angle Adjustable Flip-Up Footplate

Accommodates a fixed range of movement at the ankles, or supports the feet towards a more neutral position for comfort, stability and pressure care.



Tilt-in-Space

Allows the whole seating system to tilt while maintaining body alignment.
This can support:

- pelvic stability
- pressure redistribution
- fatigue management
- easier repositioning by caregivers



Castor Options

Multiple castor configurations are available to support safe positioning and movement of the chair around the care environment:

- Four braked castors
- Three braked castors and one directional-lock castor
- 125 mm castor upgrade

Back Options

One chair with five back options:

EasiTilt Open Back:

A more open back style that allows postural accessories to be added where required.



Flat back with laterals
(curved lateral pads)



Flat back with laterals
(kidney pads)



Lateral and kidney pads are available in small and medium sizes. They are only compatible with the Open Back.

EasiTilt Wing Back:

A winged back style available with flat, waterfall, contoured, or cocoon back cushions to suit individual postural support and comfort needs.



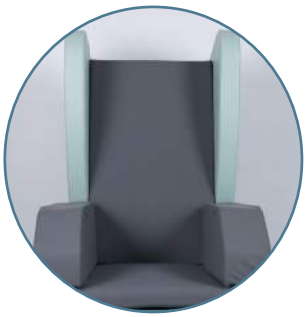

Flat back



Waterfall back



Contoured back



Cocoon back

Optional Accessories & Upgrades

Optional accessories enable the chair to be configured to meet individual clinical and functional needs:

Postural Support

- CareFlex WaterCell Technology® seat cushion upgrade: A dynamic pressure care solution designed for individuals at increased risk of pressure injury
- Docking cushion: Allows integration with an alternative prescribed pressure-redistributing cushion
- Swivel-head pommel, with optional flip-down functionality
- Curved laterals and kidney pads, available in small and medium sizes
- Positioning aids including pelvic belts and chest harnesses
- Reinforced channel leg rest designed to help centralise leg position and support improved lower limb alignment
- Tilt-in-Space inclinometer

Comfort & Lifestyle

- Soft headrest and soft profiled headrest
- Motorised option for independent control of Tilt-in-Space and leg rest elevation
- Footplate pad
- Footplate pillow
- Tray or padded tray
- Chair protector
- Seat cushion inter-liner

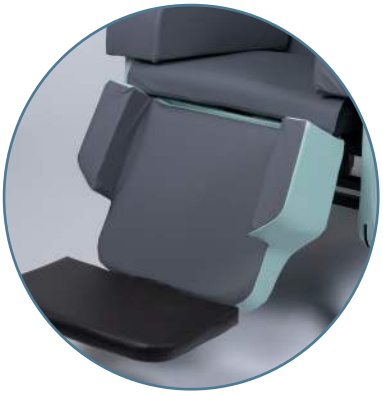

Channel leg rest



Tilt-in-Space inclinometer



Various positioning aids



Headrest options



Swivel-head pommel, with optional flip-down functionality



Footplate accessories

Technical Data

BASIC DIMENSIONS	MEASUREMENTS
Overall Height	Open back: 1260 mm Winged back: 1350 mm
Seat Height	520 mm
Overall Width	700-800 mm
Overall Length	1270 mm
Leg Rest Length	375 mm
Ground Clearance	150 mm
Tilt-in-Space Range	7° to 27°
Seat Width	400-500 mm
Seat Depth	400-560 mm
Back Height	850 mm
Back Angle	Fixed back angle 100°
Leg Rest Angle	65° to 150°
Tilt-in-Space Clearance	Open back: 290 mm Winged back: 350 mm
Leg Rest Width	530 mm
Push Bar Height	1005 mm / 1035 mm / 1065 mm
Footplate Width	445 mm
Weights	Chair: Open back: 53 kg Winged back: 56 kg (+ 5 kg for motorised) Maximum user weight: 160 kg (approx. 25 stone)
Control Options	Manual Motorised

The EasiTilt is a registered Class I medical device.

TESTED TO firainternational BS EN 16139:2013 Test Level 2

CE UK CA

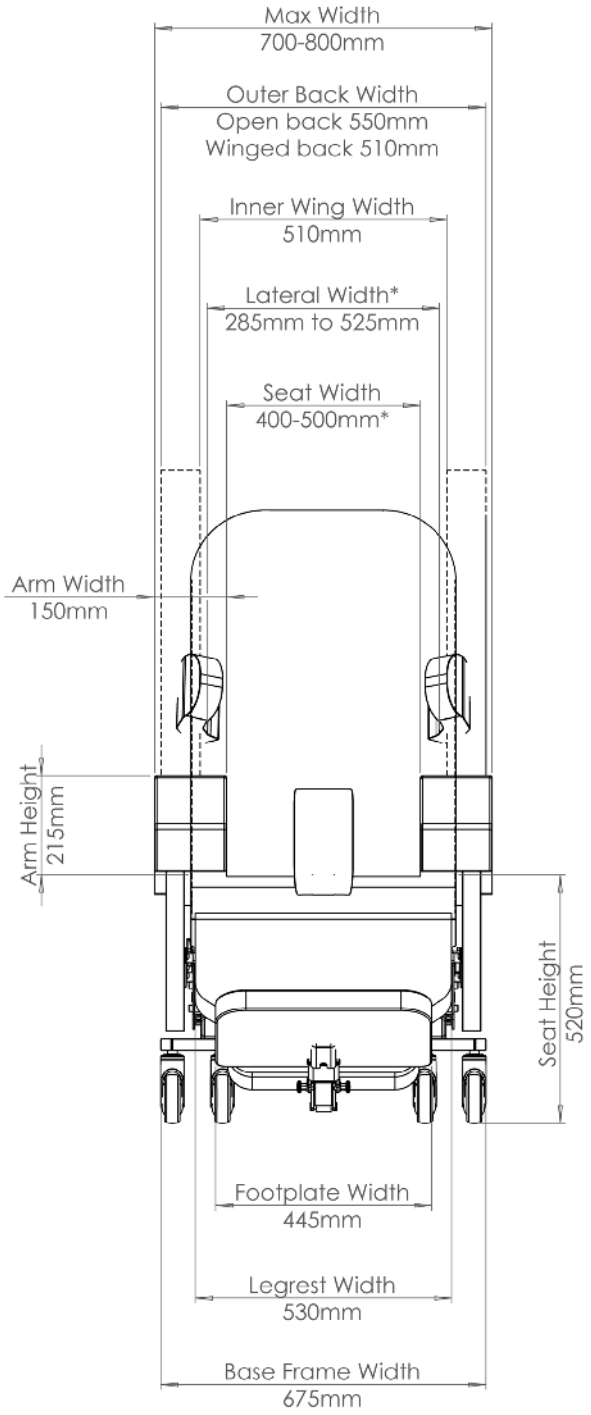

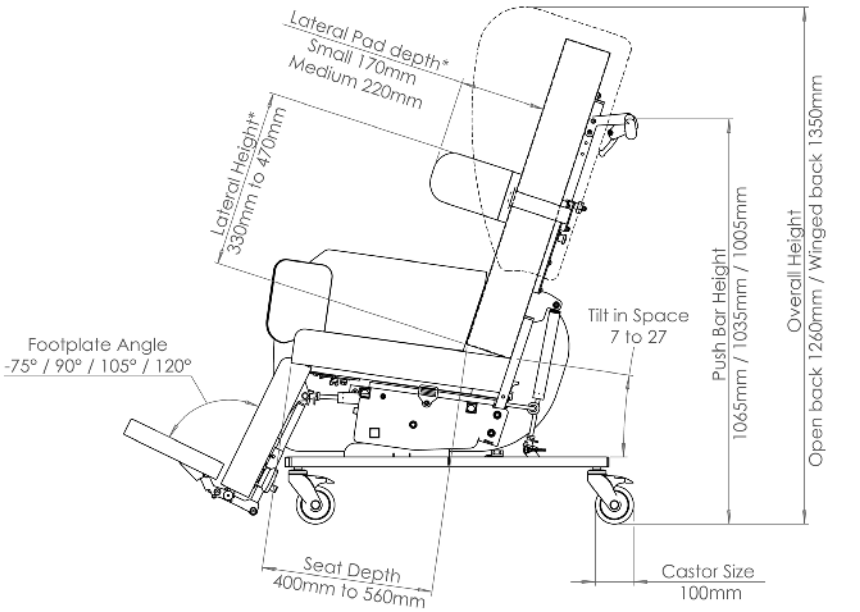

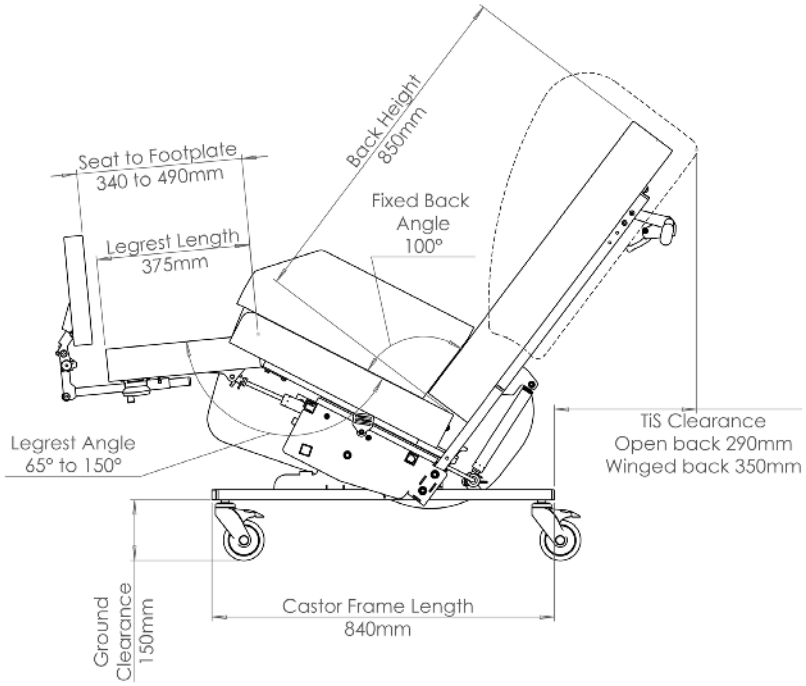

*Laterals are not available on the Winged Back version.

Fabric Options

Our fabrics are carefully selected to suit a variety of health and care environments. All fabrics are easy to clean and offer high levels of comfort and durability. They are manufactured to be resistant to moisture ingress and meet Crib 5 fire-retardancy standards. Please see our cleaning guide for full details on recommended cleaning.

All technical data sheets and certifications are available upon request.

Please email info@careflex.co.uk if you require these.

Antimicrobial Shieldplus Protection: Permanently inhibits the broadest spectrum of microbes (even C. difficile and coronavirus) and helps prevent unpleasant odours.
Acryltron™: Affords improved resistance to cleaning chemicals.
Polyurethane Coating: For durability and stain resistance.
PVC Core: For core strength and durability.
Substrate: High performance knitted substrate providing a solid foundation.
Abrasion: 350,000+ Martindale rubs, 100,000 Wyzenbeek DR

Vapour Permeable Fabric

PU coating with a polyester base cloth.
Recommended for contact areas.

Technical properties:

- Flame-retardant to Crib 5
- Waterproof 2.5 metres
- Stain-resistant
- Antimicrobial
- Antifungal
- Breathable
- Multi-stretch

Available Colours

Zest 155
Duck Egg

&

Grey VP

Or

Zest 906
Ash

&

Black VP



Other colour choices are available but are subject to an upgrade fee.

Express Chairs

The CareFlex Express Chair service is designed for individuals in the UK who urgently need a specialist chair to facilitate a smooth discharge from hospital.

Whether it's for an individual undergoing stroke rehabilitation, someone requiring immediate pressure management, or anyone in need of a suitable seating solution for their home, care home or nursing home environment, CareFlex can dispatch a chair within just five working days*.

The EasiTilt® is available on our Express Chair service.

Key benefits of CareFlex specialist seating:

CareFlex specialist seating aims to:

- Support comfort, relaxation and appropriate seated positioning.
- Support fatigue management and energy conservation.
- Provide a stable base of support to promote function and independence.
- Facilitate normal movement patterns or control abnormal movement patterns.
- Help manage, delay or accommodate postural deterioration.
- Enhance physiological functions.
- Promote good health and well-being.
- Improve engagement, interaction and social inclusion.



Should you have an urgent requirement or are supporting an individual waiting for equipment to allow their hospital discharge, please call one of our friendly team on: **0800 018 6440.**

*Express chairs are subject to availability.

DISCLAIMERS

© Careflex Limited 2026. All rights reserved. This booklet or any portion thereof may not be reproduced or used in any manner whatsoever without the express written permission of the copyright owner.

The information given in this booklet represents current advice at the time of publication. It is intended as general information and guidance and is not a substitute for professional medical advice, which should be sought for specific, individual cases. It is the responsibility of the treating clinician, relying on independent knowledge and skills, to determine the best intervention and method of application for the client.

The Tilt-in-Space function should always be prescribed responsibly, ensuring that it is safe and appropriate for the user following a comprehensive assessment of posture and risk, with advice sought from the multidisciplinary team where indicated. In some cases, this function may be contraindicated and could also increase shear and friction forces.

An individual's ability to tolerate a leg rest will be dependent on their hamstring muscles and knee range of movement; inappropriate elevation of the lower limbs can cause pain, a posterior pelvic tilt, and sliding down the chair, increasing shear and friction forces.

All belts and harnesses (positioning aids) must be prescribed, implemented and monitored responsibly following a comprehensive risk assessment. Please see the following for further information:

- British Standard (BS) 8625:2019, Selection, placement and fixation of flexible postural support devices in seating. London: BSI.

- International Organization for Standardization (ISO) (2024) ISO/TS 16840-15:2024 Wheelchair seating, Part 15: Selection, placement and fixation of flexible postural support devices in seating [Online] https://www.iso.org/standard/80064.html

- Medicines and Healthcare Regulatory Agency (MHRA) (2015) MDA/2015/018. All posture or safety belts fitted to supportive seating, wheelchairs, hoists and bathroom equipment. London: MHRA.

CareFlex

Call for a free assessment or product demonstration today!

0800 018 6440

solutions@careflex.co.uk

www.careflex.co.uk

